EH2308

Industrial 8-Port Unmanaged Fast Ethernet Switch

FEATURE HIGHLIGHTS

- Vehicle/E-Mark ECE R10rev.05

Technology

- 10/100BaseT(X) (RJ45)
- Broadcast storm protection
- Support IEEE 802.3/ 802.3u/ 802.3x
- 10/100M, Full/Half-Duplex, MDI/MDI-X auto-detection

Reliability

- Redundant dual DC power inputs
- Operating temperature ranges from -10~70°C
- Rugged high-strength housing
- DIN-Rail or wall mounting ability

PRODUCT DESCRIPTION

EH2308 with 8 RJ-45 ports for your industrial applications. It designs to work in the industrial environment, such as in hazardous locations that comply with CE, FCC, UL, and RoHS standards. EH2308 is also available in an E-Mark certified version, that allows this compact, powerful and cost-effective switch to be used in in-vehicle applications.

EH2308 provides two redundant power inputs that can be connected simultaneously to wide-range DC power sources. If one of the power inputs failure, the other live source acts as a backup to provide the EH2308 power needs automatically.

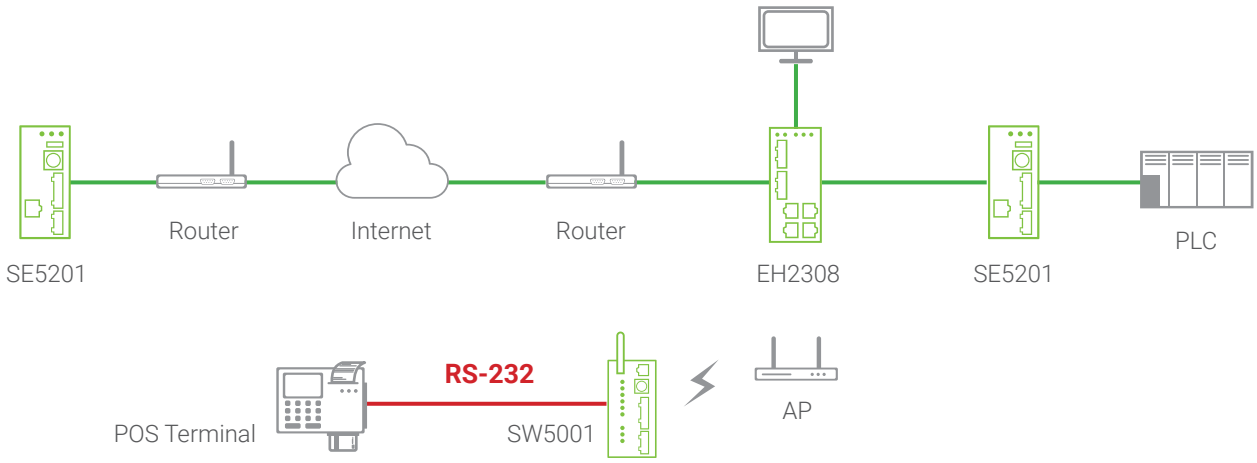

TEL: + 886 - 3 - 5508137
FAX: + 886 - 3 - 5508131
EMAIL: sales@atop.com.tw
WEB: http://www.atop.com.tw

E13 10R-05 15220
v: 5.2

SPECIFICATIONS

Technology	
Standards	IEEE802.3, 802.3u, 802.3x
Processing Type	Store and Forward
Flow Control	IEEE802.3x flow control, backpressure flow control
Interface	
RJ-45 Ports	10/100BaseT(X) auto negotiation speed Full/Half-duplex mode, and auto MDI/MDI-X connection
LED Indicators	Power, 10/100M
Power	
Input	9~48 VDC, Dual inputs
Consumption	5 Watts Max
Max current	0.52A @9VDC
Connector	Removable 5-pin Terminal Block for power input
Reverse Polarity Protection	Present
Environment	
Operating	-10°C ~ 70°C (14°F ~ 158°F)
Storage	-40°C ~ 85°C (-40°F ~ 185°F)
Ambient Relative Humidity	5%~95% non-condensing
Physical	
Housing	IP30 protection, metal housing
Dimension	45.2mm x 90mm x 78mm (W x H x D)
Weight	255g
Approval	
UL(Safety)	UL60950-1 2nd Ed. /CSA C22.2 No.60950-1-07 2nd Ed.
FCC(EMI)	FCC 47 CFR Part15, Subpart B, Class A
CE(EMI)	European Standard EN 55022:2006/A1:2007 Class A EN 61000-3-2:2006 EN 61000-3-3: 1995/A1:2001/A2 :2005
CE(EMS)	EN 55024:1998/A1:2001/A2:2003(IEC 61000-4-2:1995/A2:2000) IEC 61000-4-3:2002 IEC 61000-4-4:2004 IEC 61000-4-5:1995/A1:2000 IEC 61000-4-6:1996/A1:2000 IEC 61000-4-8:1993/A1:2000 IEC 61000-4-11:1994/A1:2000
Vehicle/E-Mark	ECE R10rev.05
Shock	IEC 60068-2-27
Drop	ISTA Test Procedure 2A
Vibration	IEC 60068-2-64

RoHS	Lead(Pb) Free
MTBF	568862 hrs(25ºC) / 64.94 years(25ºC)
Warranty	5 years

DIMENSIONS & LAYOUT

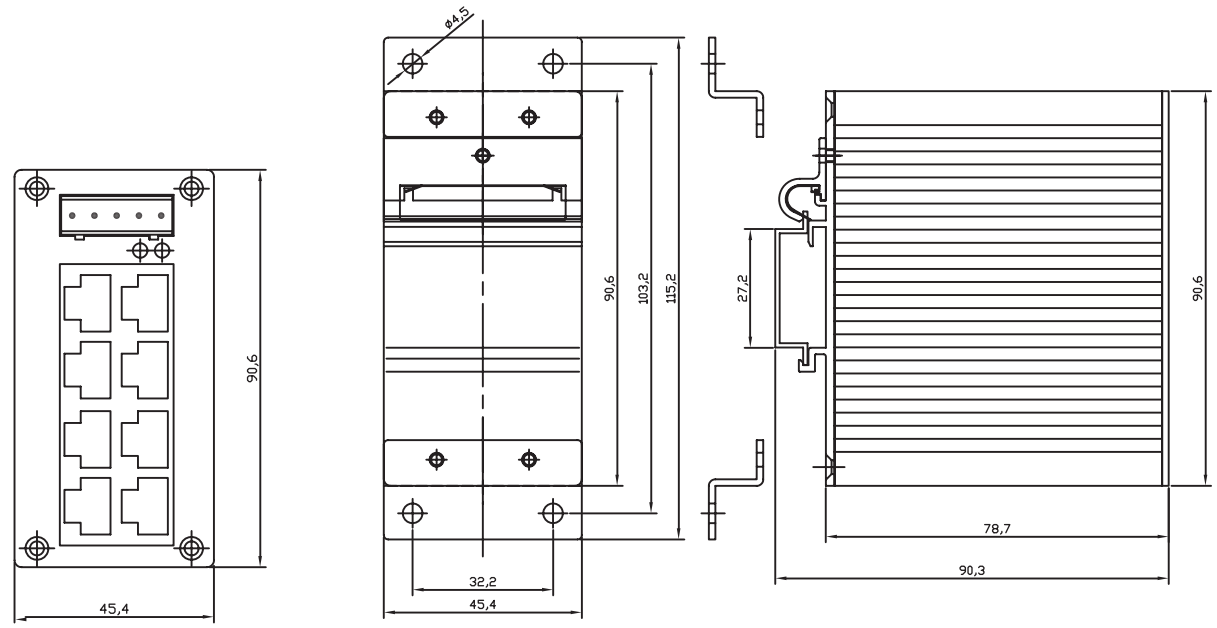

Front-panel front view | Backboard rear view | (Mount kit) | Housing side view

ORDERING INFORMATION

Ordering information

Model Name	Part Number	Description
EH2308	1P1EH230800001G	Industrial 8-port Unmanaged Fast Ethernet Switch with 8x 10/100TX
EH2308 (E-mark)	1P1EH230800003G	Industrial 8-port Unmanaged Fast Ethernet Switch with 8x 10/100TX

Optional Accessories

Model Name	Part Number	Description
UN315-1212 (US-Y)	505001511200003G	Y-Type power adapter, 100~240VAC input, 1.25A @ 12VDC output, US plug, LV6
UNE315-1212 (EU-Y)	505001511200013G	Y-Type power adapter, 100~240VAC input, 1.25A @ 12VDC output, EU plug, LV6

TEL: + 886 - 3 - 5508137
FAX: + 886 - 3 - 5508131
EMAIL: sales@atop.com.tw
WEB: http://www.atop.com.tw

Delmation
products

Delmation Products

Blauw-roodlaan 300
2718 SK Zoetermeer
079 - 342 20 41

www.delmation.nl | info@delmation.nl